TOTO®

LT185

Curva™ Vessel Lavatory

FEATURES

- 18" dia.
- Without overflow
- Vitreous china
- Complete with installation template
- ADA compliant

MODELS

- LT185
  Round vessel lavatory

COLORS/FINISHES

- #01 Cotton
  #12 Sedona Beige

CODES/STANDARDS

- Meets and exceeds ASME A112.19.2/CSA B45.1
- Certifications: IAPMO(cUPC), State of Massachusetts , City of Los Angeles, and others
- Code compliance: UPC, IPC, NSPC, NPC Canada, and others
- ADA compliant
- Complies with CA Prop 65 warning requirements

PRODUCT SPECIFICATION

This vessel lavatory shall be made of vitreous china. Lavatory shall be 18" in diameter. Product shall be without overflow and lavatory shall include mounting assembly. Lavatory shall be ADA compliant. Lavatory shall be TOTO Model LT185_____.

LT185

Curva™ Vessel Lavatory

SPECIFICATIONS

- Waste 1-1/4" O.D.
- Size 18"Dia.
- Basin 13"Dia.
- Warranty One Year Limited Warranty
- Material Vitreous china
- Shipping Weight 20.5 lbs.
- Shipping Dimensions 19"W x 19"D x 8-1/4"H

INSTALLATION NOTES

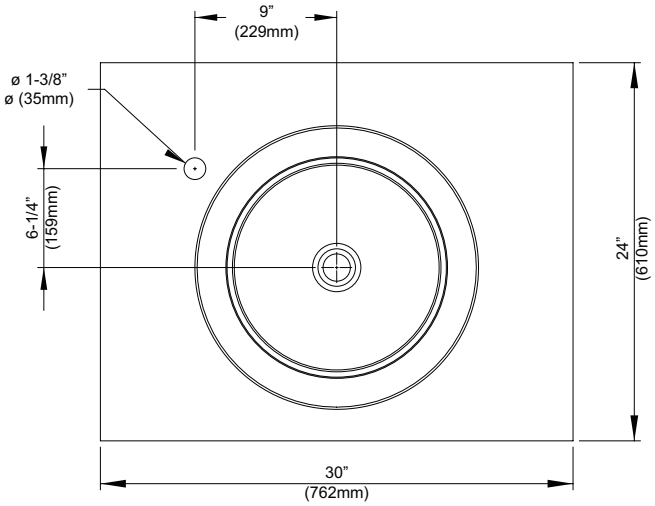

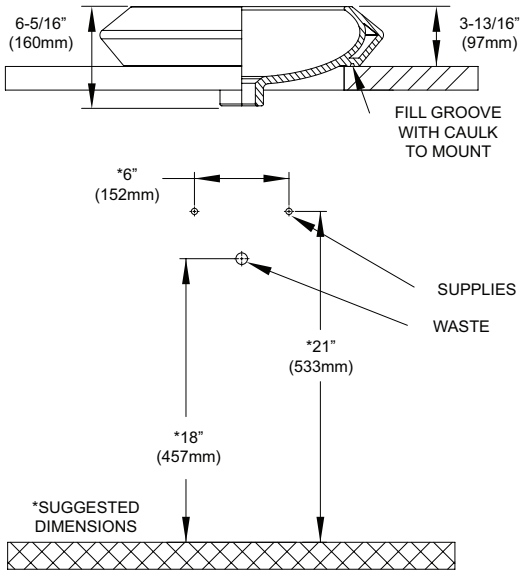

ADA Compliance Check

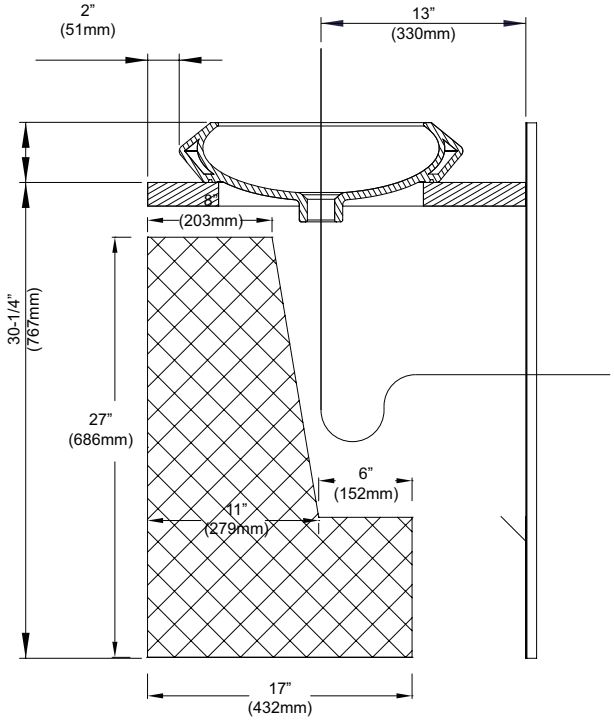

TOTO®

These dimensions and specifications are subject to change without notice

Ph: (888) 295-8134 | Fax: (800) 699-4889 | www.totousa.com

#SS-00432 v.02

Printed in U.S.A. | © TOTO LTD. 07/10 | Printed on recycled paper ♻